EC PROFESSIONAL AUTOMATIC SLICERS

AUTOMATIC F 300I- F 330I

USE AND MAINTENANCE MANUAL

FAC SRL
macchine affettatrici industriali e familiari
Via Morazzone, 137 - 21044 CAVARIA (VA)
Tel. +39 0331 212252 - Fax. +39 0331 216443
www.slicers.it
info@slicers.it

EN

100% Made in Italy

CE

EC PROFESSIONAL AUTOMATIC SLICERS

AUTOMATIC F 300I- F 330I

USE AND MAINTENANCE MANUAL

EN

100% Made in Italy

CE

INDEX

- GENERAL WARNINGS ..... Pag. 4
- USE WARNINGS ..... Pag. 10
- MANUFACTURER'S WARRANTY AND RESPONSIBILITIES ..... Pag. 11
- PACKING ..... Pag. 12
- NAMEPLATES - CONFORMITY MARKINGS ..... Pag. 13
- SUPPLIED ACCESSORIES ..... Pag. 14
- TECHNICAL DESCRIPTION AND INTENDED USE ..... Pag. 14
- ELECTRICAL AND MECHANICAL SAFETY DEVICES ..... Pag. 16
- SPACE REQUIREMENT ..... Pag. 17
- MAIN TECHNICAL DATA ..... Pag. 17
- MAIN COMPONENTS ..... Pag. 18
- INSTALLATION AND PRELIMINARY CHECKS ..... Pag. 19
- COMMANDS DESCRIPTION ..... Pag. 20
- USING THE MACHINE ..... Pag. 21
- SLICER CLEANING ..... Pag. 24
- MAINTENANCE ..... Pag. 31
- EXECUTION OF THE SHARPENING ..... Pag. 32
- LUBRICATION ..... Pag. 34
- MOTOR BELT TENSION ADJUSTMENT ..... Pag. 34
- TAKING THE SLICER OUT OF SERVICE ..... Pag. 35
- TROUBLESHOOTING ..... Pag. 36
- USER NOTE ..... Pag. 37
- ELECTRICAL SCHEME ..... Pag. 38
- MOCA DECLARATION ..... Pag. 40

N.B. SOME IMAGES INCLUDED IN THIS MANUAL ARE VALID FOR ALL THE VERSIONS OF GRAVITY SLICERS.

GENERAL WARNINGS

Meaning of warning signs found in booklet

DANGER: Indicates an imminently hazardous situation which, if not avoided, could result in serious injury or even death. The use of this term is limited to the most extreme situations.

ATTENTION: Indicates a potentially hazardous situation which, if not avoided, could result in serious injury (and in extreme cases death).

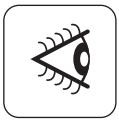

WARNING: Indicates a potentially hazardous situation which, if not avoided, may result in minor injuries to personnel or damage to equipment. It also alerts the user on incorrect operating modes.

Safety warnings indispensable before use

Carefully read the warnings contained herein as they provide important information regarding safe installation, use and maintenance of the Gravity slicing machines for food use. The purpose of this pubblication, simply defined ‘manual’ below, is to allow the user, especially to the direct operator to take every measure and to prepare all the necessary human and material resources for a safe and durable use of the. This booklet MUST be kept for all the slicer lifetime and in case of need (example: damage tamperising even partially its consultation, etc.) the user must ask for a new copy to the manufacturer.

GENERAL WARNINGS

In case of sale of the slicer, deliver to the new owner this manual too.

The installation must be performed following the instructions of the manufacturer. A wrong installation can cause damages to people, animals or things, in respect of which the manufacturer cannot be considered responsable.

Children should not use the device as a toy and should neither clean nor use the equipment.

Keep away the children form the device and the power cord.

The appliance must be used by adults adequately trained for the purpose who have carefully red the content of this manual.

- The elements of the packing (plastic bags, expanded polystyrene, etc.) must be kept out of reach of children as they are potential sources of danger.

The electrical safety of this device is ensured only when it's correctly connected to an efficient grounding installation in accordance with the electrical safety standards in force.

- It's necessary to verify this fundamental safety requirement and, in case of doubt, ask for an accurate installation safety control by professionally qualified personnel.

The manufacturer cannot be considered responsible for any damage caused by lack of installation's grounding.

GENERAL WARNINGS

- Before plugging the appliance make sure that the data on the label correspond to those of the electrical distribution network.
- The plate is on the bottom of the appliance.
- For your safety, it is recommended to power the device through a circuit breaker (DRC) with trip current not exceeding 30 mA.
- In case of incompatibility between the socket and the plug of the appliance have the die-cast wire and plug with another one suitable by an authorized retailer. In case of tampering the manufacturer doesn't answer neither for safety, nor for warranty. Alternatively have the socket replaced with a suitable type by a qualified professional. The latter, in particular, will also have to ensure that the section of the socket cables is suitable for the power absorbed by the appliance.
  In general it is not advisable to use adapters, multiple sockets and/or extensions.
- Do not connect the appliance to the electrical power through external timers or remote operating systems.
- The use of any electrical appliance requires the observance of some basic rules. in particular:
  - do not touch the appliance with wet hands
  - do not use the appliance barefoot
  - do not pull the power cord or the appliance itself to remove the plug from the socket
  - do not leave the aplliance exposed to atmospheric agents (rain, sun, etc.)
  - do not move the appliance when is running.
  - the appliance was not designed to be used under rain and must not be deposited outdoor or in damp places.
- In case of failure and/or malfunction of the appliance, turn it off and don't tamper it.
  For repairs apply only to the manufacturer or to a service center authorized by the same and require the use of genuine spare parts. Failure to comply with the above may compromise the security of the device.

GENERAL WARNINGS

- If you decide not to use a device of this type any more, it must be made inoperative by cutting the power cord after removing the plug from the socket.
  It is also recommended to make harmless those parts of the equipment which may constitute a danger, especially for children who might use an abandoned appliance for their games.
- To avoid dangerous overheating, it is recommended to extend the power cord to its full length and use the appliance as recommended in “USING THE MACHINE”.

☞ **During the functioning, the socket must be easily accesible in the event that becomes necessary to unplug the appliance. Do not place the appliance under a socket so that the wire doesn’t interfere with the correct use of the machine.**

- Do not leave the appliance plugged in unnecessarily. Unplug it from the power supply when the device is not used.
- After use, always switch off the unit and remove the plug from the socket.
- After each use, always perform a thorough cleaning of all parts in contact with food, as mentioned under “Cleaning the slicer”.
- Do not block the openings, ventilation or heat dissipation slots.
- If the power cord of this appliance is damaged, it must be replaced by a service center authorized by the manufacturer, as special tools are required.

⚠ **Before performing aby operation turn off the appliance and disconnect the power plug from the socket.**

☞ **Make sure the power cord does not protrude from the floor to avoid that someone can pull it also inadvertently knocking the appliance.**

GENERAL WARNINGS

☞ **Place the appliance on a horizontal and firm supporting plane, whose surface is not sensitive (eg. Lacquered furniture, tablecloths etc.). Make sure that the appliance is safely supported.**

☞ **Do not place the appliance on or near heat sources.**

⚠ **Place the appliance far from sinks and faucets.**

☞ **The blades are sharp; handle with care.**
Do not use the appliance if the blades are damaged.

☞ **Never immerse the appliance in water.**

☞ **Do not use the appliance in environments containing explosive, combustible gases or flammable liquids (paints, glues, spray cans, etc.).**
DANGER OF EXPLOSION AND FIRE.

☞ **This appliance must be used only for the purpose for which it was designed, that is for slicing food products (see page 15) in respect to the directives and regulations reported in the declaration of conformity (see next to last page).**
Any other use is considered improper and dangerous.
The manufacturer can not be held responsible for any damage caused by improper, erroneous and unreasonable use.

GENERAL WARNINGS

Do not remove safety devices and do not alter or remove mechanical and electrical guards.

Always use protective scratchproof gloves for cleaning and maintenance.

Do not operate the empty appliance.

In case of problems with the appliance, contact an authorized service center.
Do not attempt to repair the device yourself.
Any repair work carried out on the device by unauthorized personnel will void the warranty even if its life had not come to an end.

If you have any doubts regarding the contents of the user guide or require additional information, please contact the manufacturer or technical support immediately quoting the clause number of the topic in question.

No part of this publication shall be reproduced or transmitted without written permission from the manufacturer.

Use of the machine requires great concentration, PAY ATTENTION AT ALL TIMES!

- Do not wear loose-fitting clothes particularly with open sleeves; where necessary use suitable headgear to cover hair.
- When slicing, do not allow anyone to approach the slicer, especially the blade.

USE WARNINGS

- Do not remove, cover or alter the rating plates fitted to the machine body and ensure their prompt replacement in case of damage.
- Ensure that the product tray, receiving tray, surrounding areas and floor are kept clean and dry at all times.
- Do not use the slicer as a supporting surface or lay any object on it that is extraneous to normal slicing operations.
- Place and remove the goods to be sliced on the sliding plate only with the platter completely retracted **(away from the blade**) and the cart totally towards the operator.

☞ **DO NOT use slicing accessories that have not been supplied by the slicer manufacturer.**

- Do not damage the blade by cutting hard objects (bones, etc.).
- If the size of the food to be sliced are higher than those indicated under “Working cut” in the table “Technical data”, reduce its size to work safely.

MANUFACTURER'S WARRANTY AND RESPONSIBILITIES

- This device is guaranteed for 24 months.
  The purchase date must be proven with the relevant document.
  In the absence of valid fiscal document, the warranty claim can not be exercised.

- In case of non-compliance the claim must be made in writing within two months from the observation of the defect attaching the tax document, compiled in the act of buying, with stamp and signature of the store.

Manufacturer's warranty and responsibilities

- The guarantee of proper operation and full compliance of the machines to their intended service depends on the correct application of the instructions contained in this manual.
- **The manufacturer is not responsible directly and indirectly for any damage caused by improper use of the device** resulting from:
  - failure to follow instructions contained in this manual
  - use of untrained personnel;
  - use not in accordance with specific regulations, in force in the country of installation;
  - changes and / or unauthorized repair;
  - use of accessories and unoriginal spare parts;
  - misuse of the machine with different functionality from the one it has been built for.
  - incorrect installation.
  - failure to comply with the specific power techniques
  - insufficient or incomplete periodic maintenance.
  - use by people under the age of 18.
  - use by people whose physical, sensory or mental skills are reduced.
  - exceeding the loading limits allowed by the machine
  - use in environments different from the food one
  - exeptional events.

PACKING

1.1 - UNPACKING

When taking delivery of the slicer, ensure that the packaging is fully intact; if this is not the case, please advise the courier or local dealer immediately.
In order to remove the slicer from the packaging, please proceed as follows:

- Cut and remove the plastic bands.
- Open the box and take out the instruction booklet.
- Proceed as described hereafter.
  - Remove the protective cardboard covers from inside the box.
  - Lift the machine with great care and place on a solid surface.
  - Remove the plastic bag in which the slicer is wrapped.

  Check that all components specified in the delivery note and this instruction booklet are present and fully intact.

- Should any faults be noted, such as:
  - dents to the frame or guards;
  - controls that are either not working or broken;
  - missing items or other problems;

  please advise the courier, manufacturer and service centre immediately.
- Carefully dispose of packaging components (bands, cardboard, polystyrene, polythene bags, etc.) as reported below and in accordance with the standards of the di seguito ed in ottemperanza alle norme del Country of use.

GUIDE TO THE TREATMENT OF WASTE EQUIPMENT

This product complied with Directive 2012/19/EU.
The crossed out wheeled bin symbol on equipment indicates that it must be treated separately from household waste at the end of its working life and therefore taken to a recycling facility for electrical and electronic equipment or handed over to the reseller when purchasing new equipment of the same type.
The user is responsible for consigning the equipment to appropriate collection facilities at the end of its working life or face the penalties provided for by current waste management legislation.
Separate collection for subsequent delivery of waste equipment to environmentally-compatible recycling, treatment and disposal facilities to prevent possible negative impacts on the environment and human health whilst encouraging recycling of the product's components.
For further information regarding the available collection facilities, please contact your local refuse collection service or the shop in which the purchase was made.
Manufacturers and/or importers fulfil their obligations concerning environmentally-compatible recycling, treatment and disposal either directly or by joining a collective scheme.

The packing components (bands, cardboard, polystyrene, etc.) are products assimilable to the urban solid refusals.

DO NOT DUMP PACKAGING! DISPOSE OF WASTE RESPONSIBLY!

Fig. 1

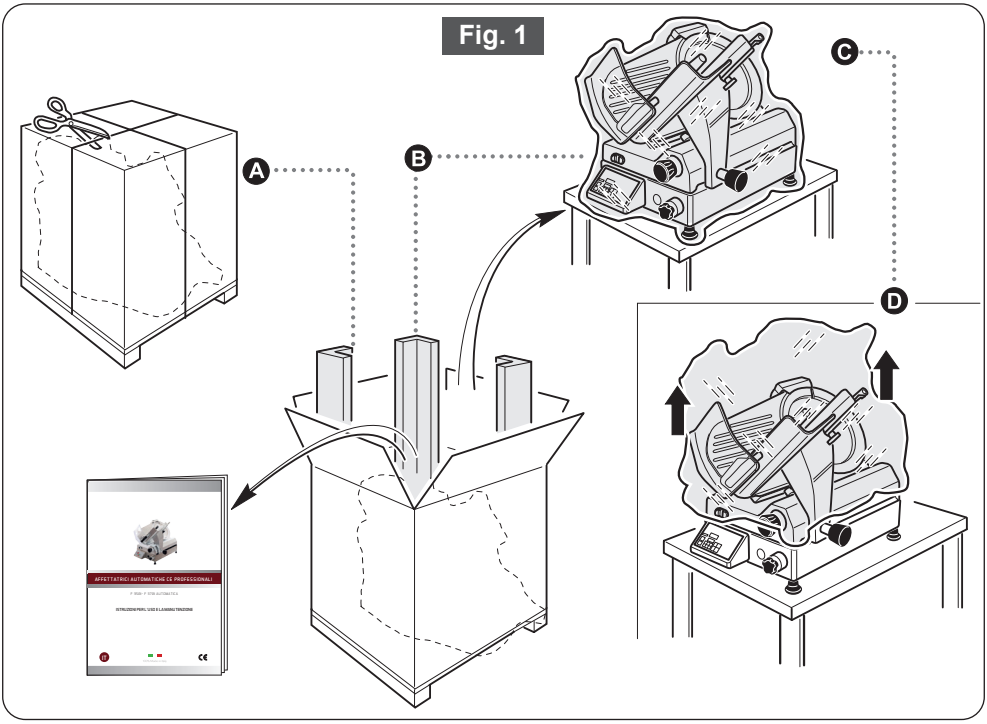

NAMEPLATES - CONFORMITY MARKINGS

The device described in this manual is produced in accordance with the directives in force, as amended. All component parts are adapted to the requirements of the Directive and the CE mark testifiying the compliance.

The plate with the identification of the manufacturer, the technical machine and the CE marking is located on the base of the slicer (figura 2).

The plate must never be removed and must always be legible.

In case of wear or damage the user is required to replace it.

SUPPLIED ACCESSORIES

Unless otherwise defined at the moment of order, the machines are supplied together with the following:

- CE conformity declaration;
- instructions manual for installation, use and maintenance;
- oiler.

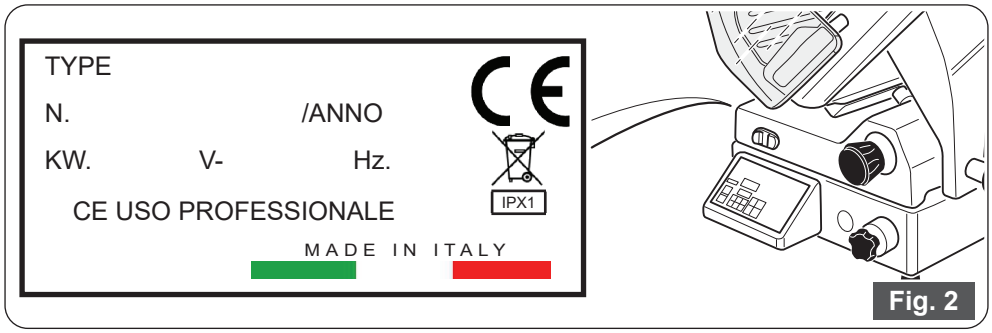

Fig. 2

TECHNICAL DESCRIPTION AND INTENDED USE

2.1 - General description

The machine is essentially composed of a double base.
The upper base supports the circular blade, mounted in an inclined position and driven by an electric motor, which has the purpose of slicing food products; a product tray is positioned in parallel with the edge of the blade.
The lower base sustains the support that runs on the guides located under the abovementioned base, driven by an electric motor.

The slice thickness is adjustable thanks to a gauge plate placed in front of the blade; this plate, on which leans the product to be cut, can be moved transversely to the blade of a value corresponding to the desired thickness of the slice.
Product feeding (progress towards the gauge plate) occurs by its own weight (gravity).
All the components of the machine are made of polished and anodically oxidized aluminium alloy, of stainless

steel and of plastic material for food products.
The cutting blade is driven by an electric motor and motion transmission is obtained thanks to a longitudinally grooved belt.
Stat-up and stop are performed using a button connected to the auxiliary control circuit which prevents accidental start-ups of the machine after possible interruptions of the mains power
The machine incorporates a sharpener built for the highest simplicity of use and safety.

2.2 - Environmental conditions of the machine use

- Temperature .. from -5 °C to + 40 °C
- Relative humidity ..... max 95%

2.3 - Slicer correct use

The slicer is only designed to slice food of the type and within the dimensional limits indicated in this instruction manuals.

2.3.a - Intended use (sliceable products)

The following products may be sliced:
- All types of cold cuts (raw and cooked ham, bacon).
- Boneless meat (cooked or raw at a temperature of not less than +3°C).
- Bread and cheese (obviously the sliceable type such as Gruyère, Fontina, etc.).

2.3.b - Unexpected or improper use (NOT sliceable products)

The following products CANNOT be sliced as they are liable to cause serious harm to the user and/or slicer itself:
- Frozen food.
- Deep-frozen food.
- Food with bones (meat and fish).
- Any other type of product specifically excluded product is sliceable but not intended to be eaten.

ELECTRICAL AND MECHANICAL SAFETY DEVICES

The mechanical safety devices taken are the following:

- A series of aluminium and transparent plastic guards on the product carriage.

The electrical safety devices taken are the following:

- Start/stop button that requires the machine voluntary restart in case of an outage or interruption of the power supply.
- Start up and stop are performed with the button connected to a control auxiliary network that prevents accidental start ups of the appliance after a possible electrical power cut.

⚠ **Do not tamper, remove nor bypass, under no circumstances, the safety devices installed on the equipment.**

3.1 - Residual risks

⚠

- **During automatic use, the support of the product tray moves horizontally at fixed speed; pay the utmost attention to avoid getting hit. Despite the efforts made while designing and building the machine, the possibility of accidents (risk of crushing and shocks) to which the user can be exposed if he is not operating VERY CAREFULLY still exits. DO NOT BECOME DISTRACTED ! DO NOT use the slicer if you're not in perfect psychophysical conditions and DO NOT allow anyone to get closer during use. A WARNING PLATE HAS BEEN POSITIONED NEAR THE HAZARDOUS POINT.**
- **During slicer use, cleaning and maintenance operations, notwithstanding all the possible cautions taken during the design and the construction of the machine, residual risks (cutting) still exist during use or during cleaning or maintenance. Therefore be careful and PAY THE UTMOST ATTENTION to what you are doing. DO NOT use the machine if you are not in perfect psychological and physical conditions. DO NOT ALLOW anyone near the machine when it is in use. ALWAYS wear gloves that can resist cuts or tears when cleaning, lubricating or sharpening the blade.**

SPACE REQUIREMENT

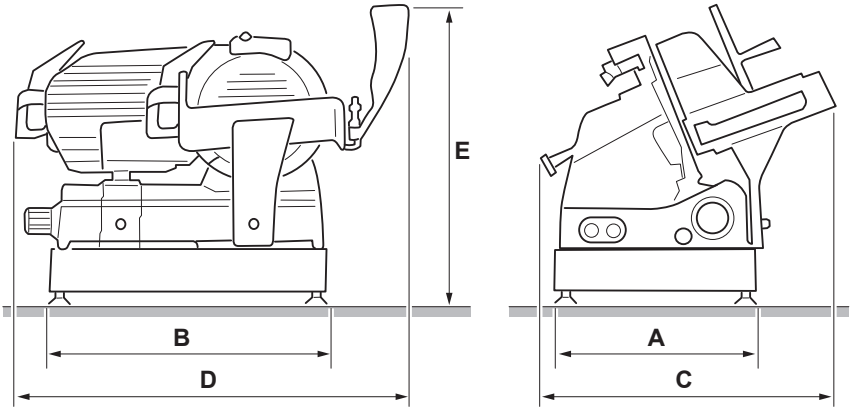

MAIN TECHNICAL DATA

Version	F 300 l	F 330 l
Motor HP	0,50	0,50
Blade ø mm	300 100 CR6	330 100 CR6
Rpm	280	280
Slice thickness mm	0/16	0/16
Cut L x H mm	260 x 220	260 x 235
A mm	425	425
B mm	540	540
C mm	640	640
D mm	790	790
E mm	710	710
Weight Kg	54,5	55,5
Sharpener	built-in	built-in
Tray blocker	standard	standard

MAIN COMPONENTS

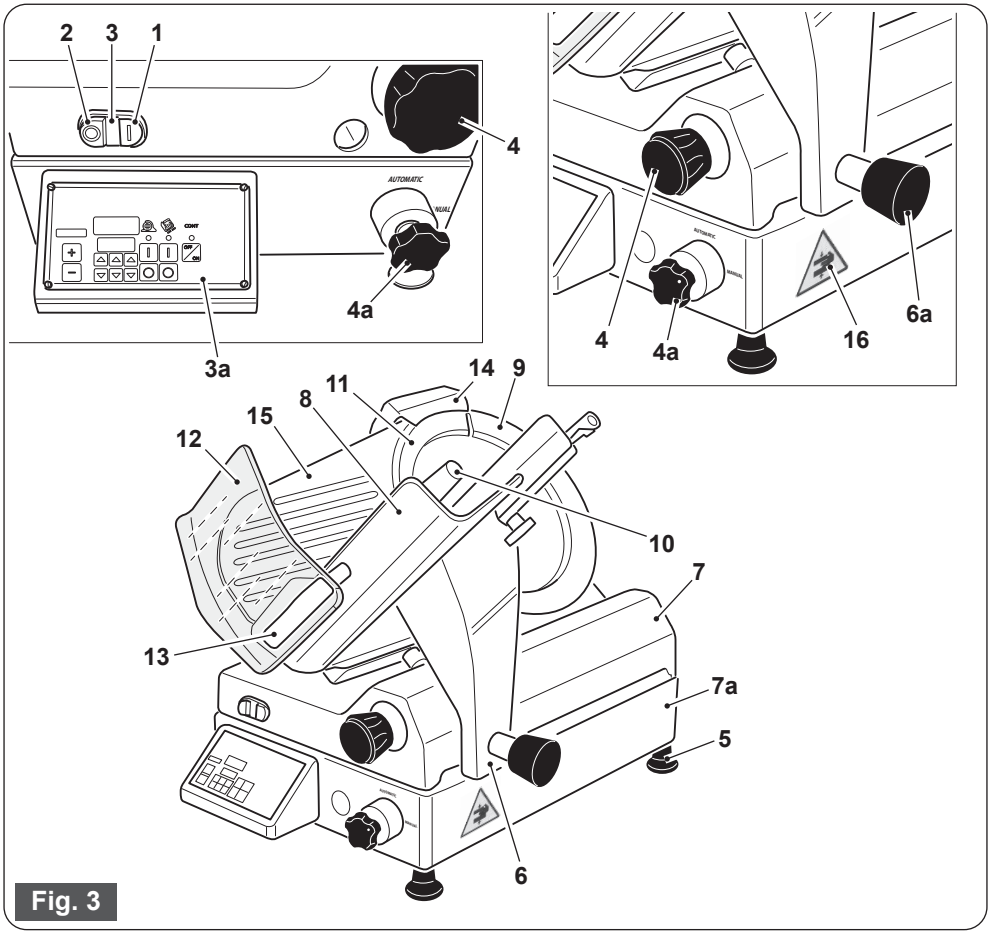

Fig. 3

1. Start button (white)
2. Stop button (black)
3. Machine in operation indicator light
3a. Panel for automatic setting
4. Knob for slice thickness adjustment
4a. Manual / Automatic selector
5. Adjustable foot
6. Tray support
6a. Tray removal knob
7. Base
7a. Base for automatic operation
8. Product tray
9. Blade cover
10. Food holder
11. Blade
12. Product tray hand guard
13. Product tray grip
14. Sharpener
15. Gauge plate
16. Warning plate for hands crushing

INSTALLATION AND PRELIMINARY CHECKS

4.1 - Installation

Place the slicer on a well leveled, smooth, dry and stable plane ,suitable to support its weight.

4.2 - Electric connection

Install the slicer in the immediate vicinity of an outlet to CEE standards derived from a system that complies with applicable regulations.

It is the user's responsibility to verify the suitability and proper functioning of the electrical system (supply line, outlet, distribution panel, differential thermal magnetic circuit breaker protection, system grounding).

Before executing the connection check that the characterisitcs of the power supply network correspond to those indicated on the nameplate of the slicer.

4.3 - Control of operation and blade rotation direction

- Press the button "**I**" (1) to start the machine and verify whether the warning light is on (3).
- Check that the blade (11) rotates in the direction indicated by the arrow (counterclockwise looking at the machine from the blade plate side).
- For slicers with three-phase supply: if the blade (11) rotates in the opposite direction, **immediatly stop the machine** pressing the button "**0**" (2) and require the intervention of qualified personnel to reverse the power cords inside the plug.
- Check the smoothness of the product tray (8) and of the product pusher (10).
- Check the operation and adjustment of the graduated knob and the gauge plate (15).

COMMANDS DESCRIPTION

5.1 - Start and stop button

- Press the white or green button (1) to give voltage to the slicer board;
- The indicator light (3) switches on signalling that the slicer is powered with mains voltage;
- Press the red or black button (2) to stop the slicer.

The thickness of the slices is adjustable rotating the knob (4), with graduated scale, anticlockwise.

Regulation field: see the “Technical description and intended use conditions”.

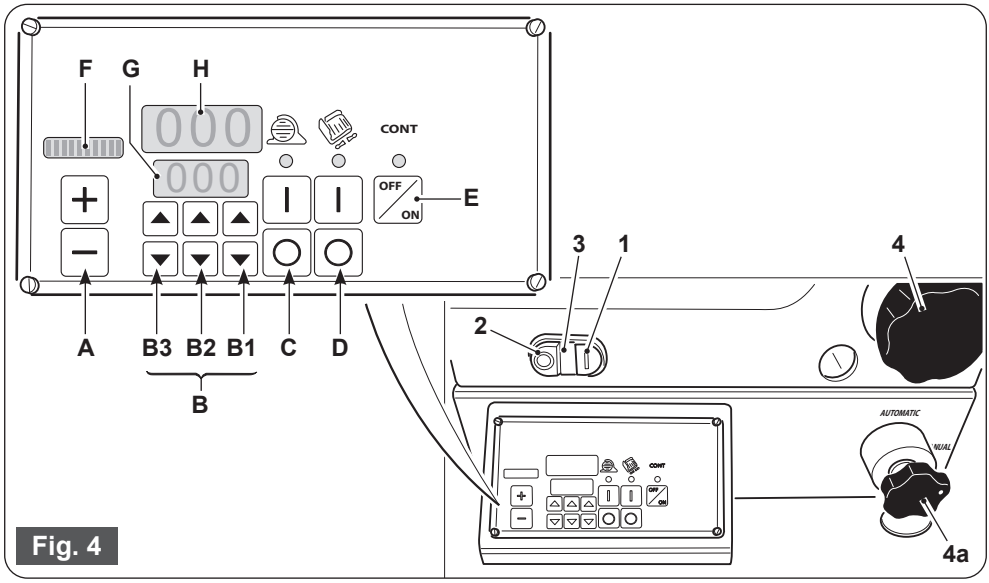

Fig. 4

A. Stroke/support adjustment key
B. Keys for setting the number of slices to cut:
  B1. Units adjustment key
  B2. Tens adjustment key
  B3. Hundreds adjustment key
C. Blade motor start and stop key
D. Tray movement start and stop key
E. Slice counter switching on/off key
F. Stroke/support adjustment display
G. Number of slices setting display
H. “Slice counting” display

USING THE MACHINE

6.1 - Automatic use of the machine

After placing the product to be sliced on the product tray, proceed as follows:

- Rotate the selector (4a) anticlockwise to set "**AUTOMATIC**" mode.
- Switch on the machine by pressing the white button (1); the indicator light (3) turns on.
- Press the key (E) to activate the "slice counter" function; the relative indicator light turns on.
- Set the number of slices to be cut by pressing the specific keys (B); the set number appears on the display (G).

☞ **If the number of slices is not set or if the "slice counter" function is disabled (indicator light switched off), the machine starts continuous operation. The count of slices appears on the display (H).**

- Set the support stroke by pressing the specific keys (A): press "**+**" to increase the stroke, "**-**" to decrease it.
- Activate the blade by pressing "**I**" (ON) on the key (C); the relative indicator light turns on.
- Activate the support movement by pressing "**I**" (ON) on the key (D); the relative indicator light turns on.
- The machine starts cutting; the count of the slices appears on the display (H).

⚠ **PAY THE UTMOST ATTENTION TO THE PRODUCT TRAY MOVEMENT. HAZARD OF CUTTING !**

- To stop the operation, press "**0**" (OFF) on keys "D" and "C".

☞ **When finished, return the thickness control knob (4) to '0'.**

6.2 - Manual use of the machine

After placing the product to be sliced on the product tray, proceed as follows:

- Rotate the selector (4a) clockwise to set "**MANUAL**" mode.
- Switch on the machine by pressing the white button (1); the indicator light (3) turns on.
- Press "**I**" (ON) on the key (C) to start the blade; the relative indicator light turns on.
- Proceed as described in the following paragraphs.

USING THE MACHINE

6.3 - Loading the product on the tray and slicing

Check that the slice thickness regulation knob (4) is correctly placed on '0';

- Draw back the carriage completely (8) (towards the operator) to loading position.
- Lift the product grip (10) by pulling it away by 10 cm from the blade and put it in rest position;

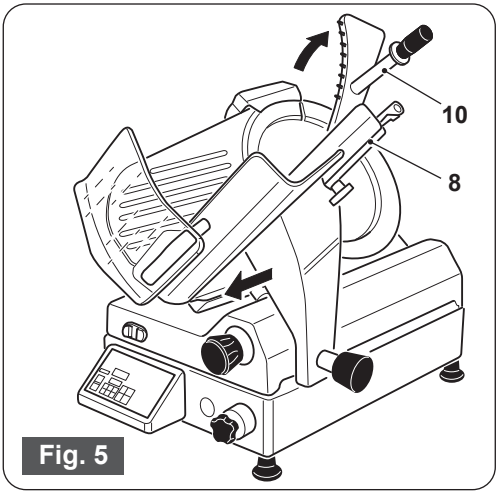

Fig. 5

- Lay the product to be sliced on the carriage (8) against the wall on the operator side;
- Secure by means of the product grip (10) by exerting a slight pressure;

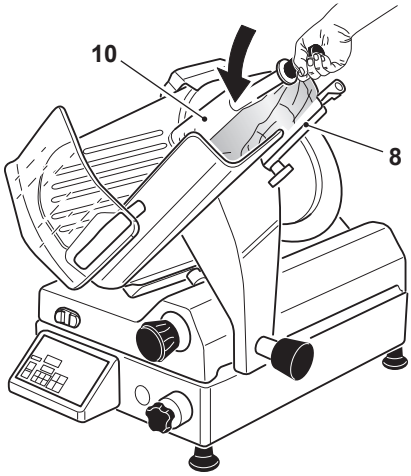

Fig. 6

USING THE MACHINE

- Adjust the slice thickness with the knob (4).
  Start the blade by pressng on the white or green button (1);

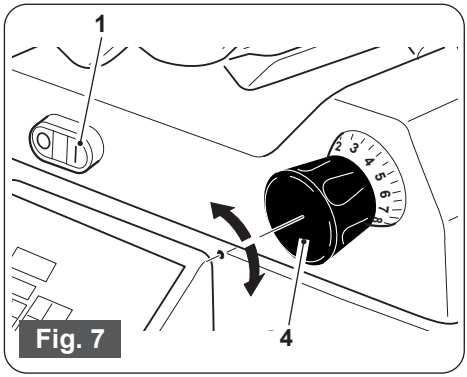

Fig. 7

- In case of manual use, grab the grip (10) fixed to the tray and start the forward and backward cutting movement. Food progress towards the gauge plate occurs by its own weight (gravity).
  In case of automatic use, the forward and backward cutting movement occurs automatically by means of a motor.
- When food weight or size won't allow to perform a satisfactory cut anymore due to the sole effect of gravity, use the machine in manual mode only, using the grip of the food holder (10);

☞ **When finished, return the thickness control knob (4) to '0' and draw the carriage back (8);**

- Stop the blade by pressing the black or red button (2).

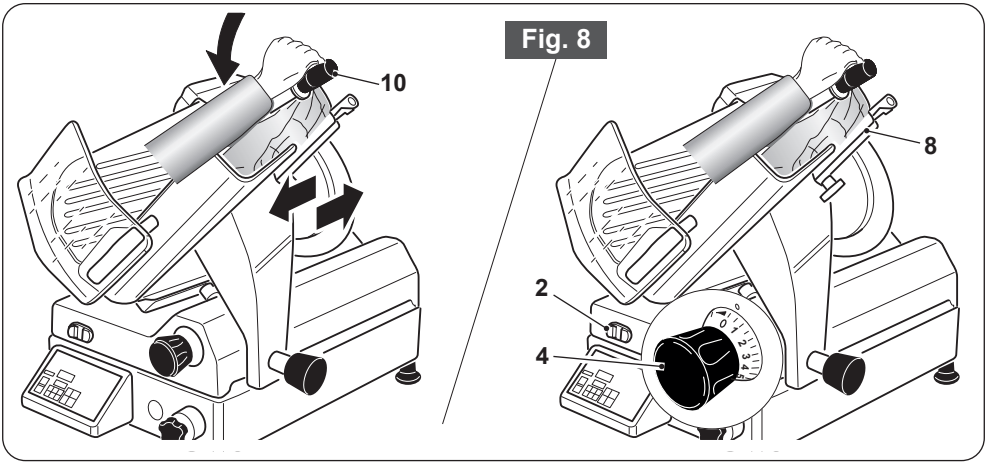

Fig. 8

SLICER CLEANING

The machines have to be carefully cleaned at least once a day; if it is necessary more frequently. After a shorter or longer period of inactivity clean the slicer before use.

WARNING: Cutting hazard!
Use protective cut- and tear-resistant gloves and perform all operations with extreme care.
PAY ATTENTION AT ALL TIMES!

7.1 - Disassembling the machine for cleaning

- Disconnect the plug from the mains power supply.;

Take to '0' the adjustment knob of the gauge plate (4);

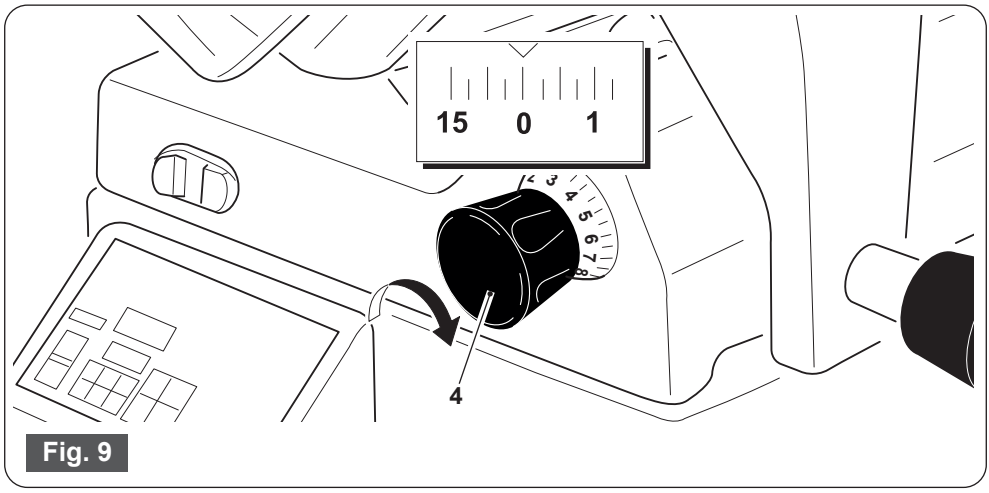

Fig. 9

- Remove the various components as described in the following paragraphs;

SLICER CLEANING

- Fully unscrew (counterclockwise rotation) the blade guard locking tie rod (17);
- If the blade guard (9) is blocked, press on the rod knob (17) to move it;
- Remove the tie rod (17) and remove the blade guard (9) using only the special lateral knobs (23);

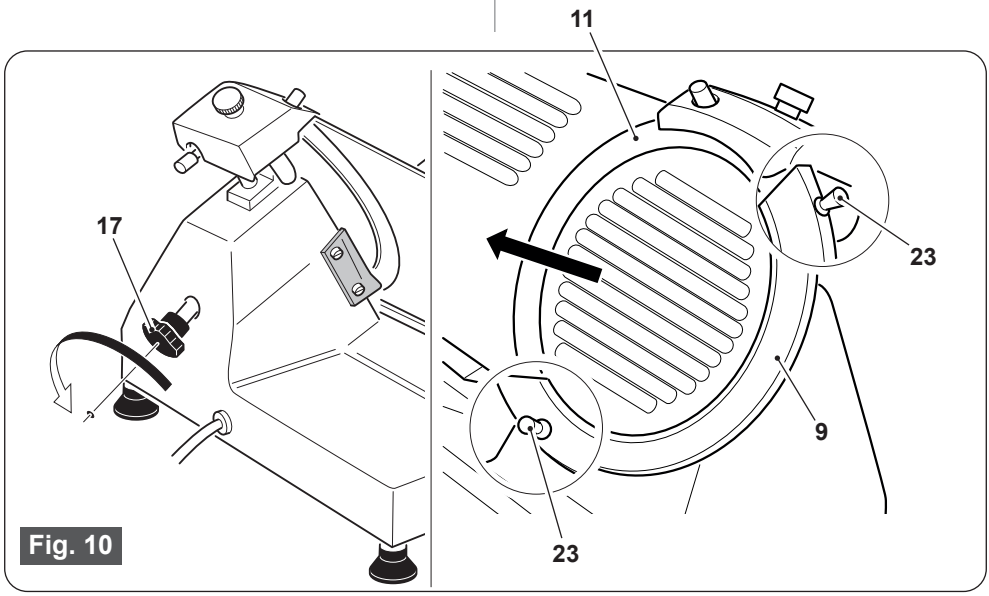

Fig. 10

- Loosen and remove the two screws with knurled head (24);
- Remove the deflector (25).

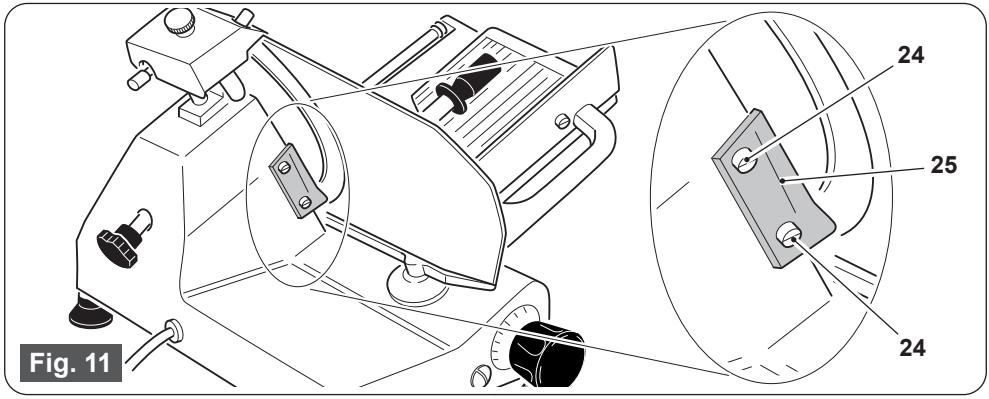

Fig. 11

SLICER CLEANING

- Loosen the knob (20a) and remove the sharpener (20).
- Take the sharpener (20) from the knob (20b) and remove it by lifting it.

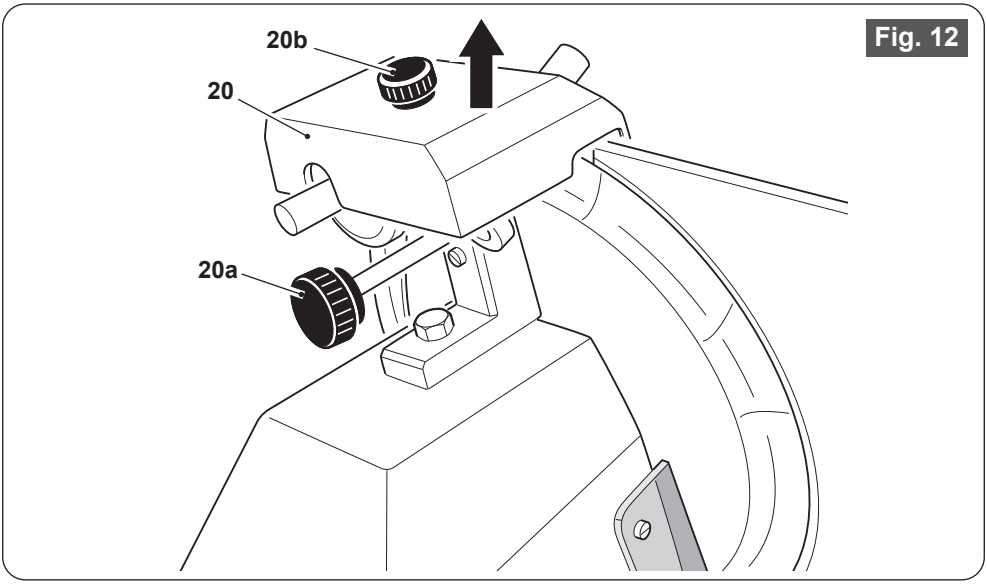

Fig. 12

For the machine's body and blade cleaning use only a cloth dampened in water or alcohol and a biodegradable frothy dishwasher cleanser at pH 7-8, at a temperature at least of +30°C.

Do not clean the machine ...

... with water or vapor jets or similar methods.

... with corrosive cleansers.

... in the dishwasher.

SLICER CLEANING

7.2 - Base cleaning

After removing all the components as described in the previous pages:

- Clean all the disassembled parts and the machine's body usimg only hot water (at a temperature at least of 30°C) and biodegradable frothy dishwasher (at pH 7-8).
- Use a soft cloth, spongy and possibly a nylon brush for the sharp zones of the product tray (8) and of the product grip (10).
- Rinse only with hot water and dry with soft and spongy cloths.

⚠ **DO NOT clean the machine with water jets, with vapor, similar methods, with corrosive cleaners in the dishwasher.**

7.3 - Cleaning the blade

- Press a damp cloth on the blade (11) and rub slowly **moving from inside to out** (towards the safety ring "S" and towards the gauge plate "15").

⚠ **ALWAYS clean the knife (11) with safety ring (S) fitted and the gauge plate (15) close to the blade in the safety position.**

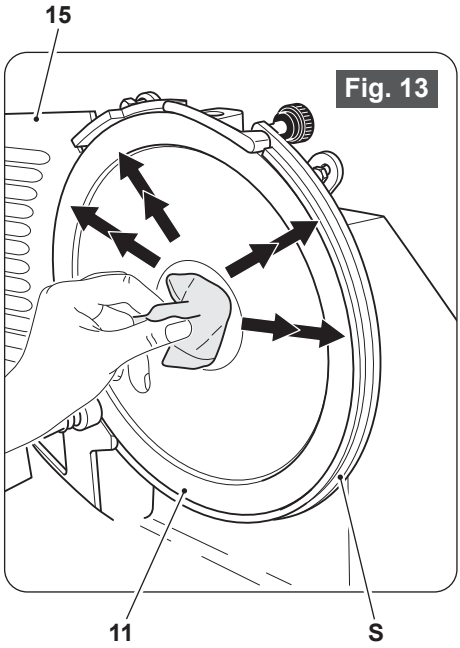

Fig. 13

SLICER CLEANING

7.4 - Safety ring cleaning

- Damp a cloth in a solution of water and alcohol.
- Place the damp cloth between the safety ring (S) and blade (11)
- Take the two ends of the cloth between your hands and slide it along the safety ring (S).

Do not use detergents to clean the blade (11).

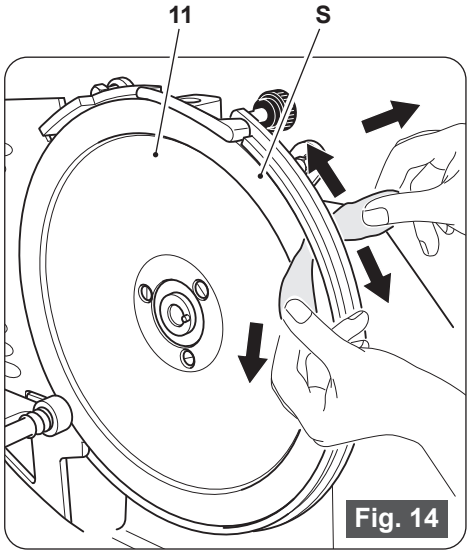

Fig. 14

7.5 - Removing the product tray with tray blocker system (in the versions where it's provided)

To remove the product tray (8), work as follows:

- Rotate on "**0**" the graduated knob (4).

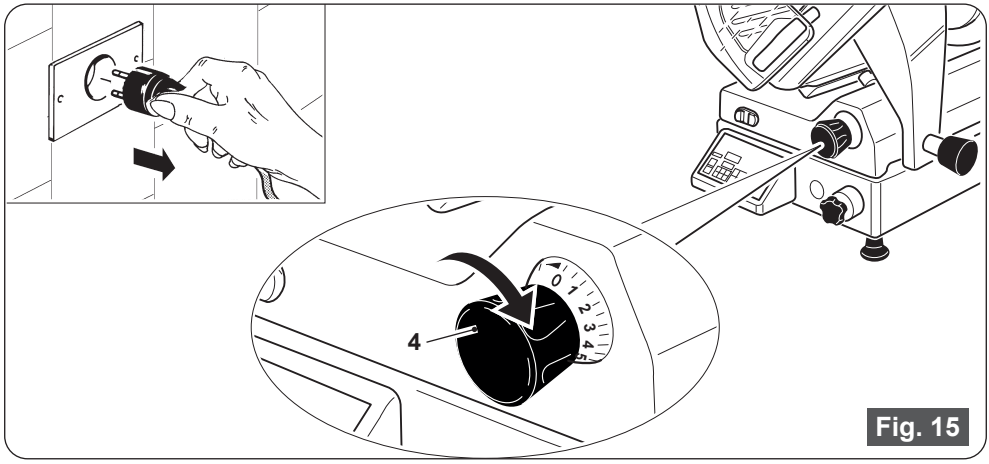

Fig. 15

SLICER CLEANING

- Bring the tray next to the graduated knob.
- Completely unscrew the knob (6a).
- Strongly pull the tray towards the operator until you hear the coupling “click” safety pivot. In this position the gauge plate (15) and the product tray (8) **cannot be moved.**

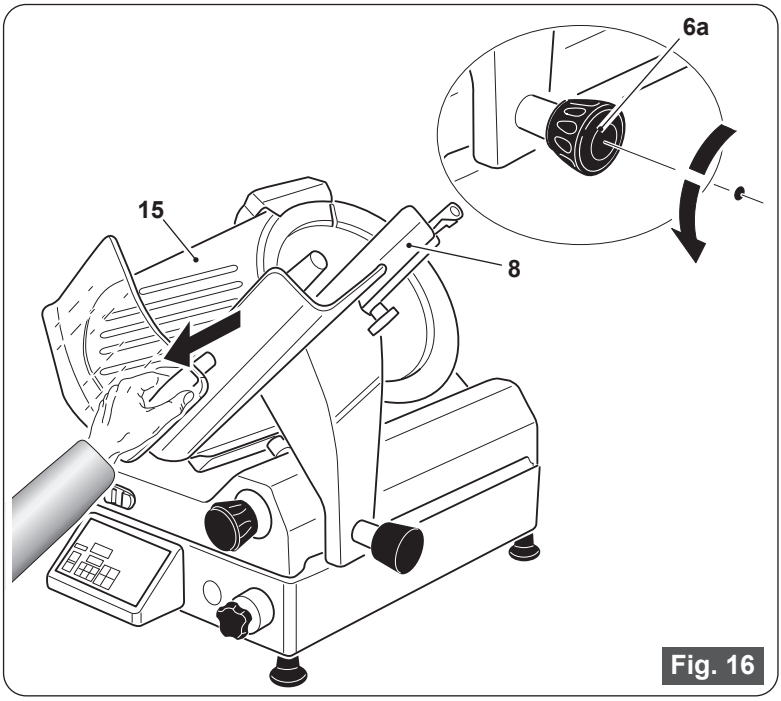

Fig. 16

SLICER CLEANING

- Lift the tray (8) and remove it (Figure 17).

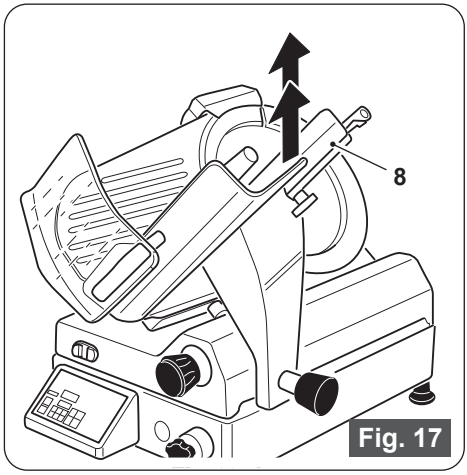

Fig. 17

The product tray (8) is particularly heavy, work carefully, possibly with two operators.

To reassemble it:

- Correctly reposition the tray (8) on the tray support (6).
- Tighten the knob (6a) until you free the tray (8).

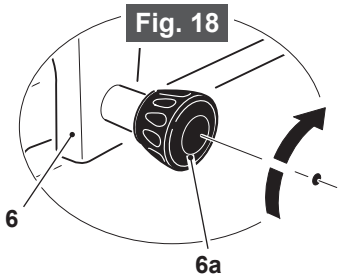

Fig. 18

7.6 - Machine reassembling

Proceed in the opposite direction to what indicated in the previous operations.

7.7 - Store the slicer

- When you finish using it, after carefully have cleaned all the components (as described in the previous sections) be sure to bring the graduated knob back to "**0**".
- Is advised to cover the slicer with a towel to protect it from dust.
  If it is not intended to use the slicer for some days, store it in a sepaired and dry place.

MAINTENANCE

8.1 - Generalities

In addition to the above-mentioned cleaning operations, you should also perform routine maintenance in order to guarantee the slicer's operating efficiency over time.
The operator may perform the following maintenance operations:

- **Blade sharpening:** periodically (periodicity and duration depend obviously on the equipment use; working times and processed material type).
- **Lubrication of carriage sliding guides:** weekly.
- **Lubrication of product grip sliding bar:** weekly.
- **Visual check of the power cord and of the gland on the machine's base conditions:** periodically.

⚠ **The maintenance operations must be performed always after disconnecting the machine from the power network and, if it's not specifically necessary another position, with the slice thickness regulation knob on '0'.**

The maintenance operations to be entrusted to **personnel authorized by the manufacturer** are the following:

- **Blade replacement;**
- **Sharpener's emery-wheelss replacement;**
- **Motor belt tension regulation;**
- **Motor transmission belt replacement;**
- **Underbase wiring's components replacement;**
- **Structural parts repair, underbase components repair.**

8.2 - Blade sharpening

Accurately clean the machine as indicated in the previous paragraphs before proceeding in the operations.

⚠ **Sharpening can be performed up to a reduction of 12 mm of the blade's diameter nominal. Over that value IS MANDATORY TO CHANGE THE BLADE entrusting the operation ONLY to personnel authorized by the manufacturer.**

EXECUTION OF THE SHARPENING

9.2 - Execution of the sharpening

WARNING: Cutting hazard! Use protective cut- and tear-resistant gloves and perform all operations with extreme care. PAY ATTENTION AT ALL TIMES!

The blade sharpening should be performed periodically, as soon as you feel a decrease in the ability of cutting blade, it should follow the instructions below:

1. Carefully clean the blade (11) with denatured alcohol to degrease it **after disconnecting the plug from the socket;**
2. Loosen the knob (20a), lift and rotate 180° the sharpener (20) and insert the wheels on the slicer's blade. Tighten the knob (20a);

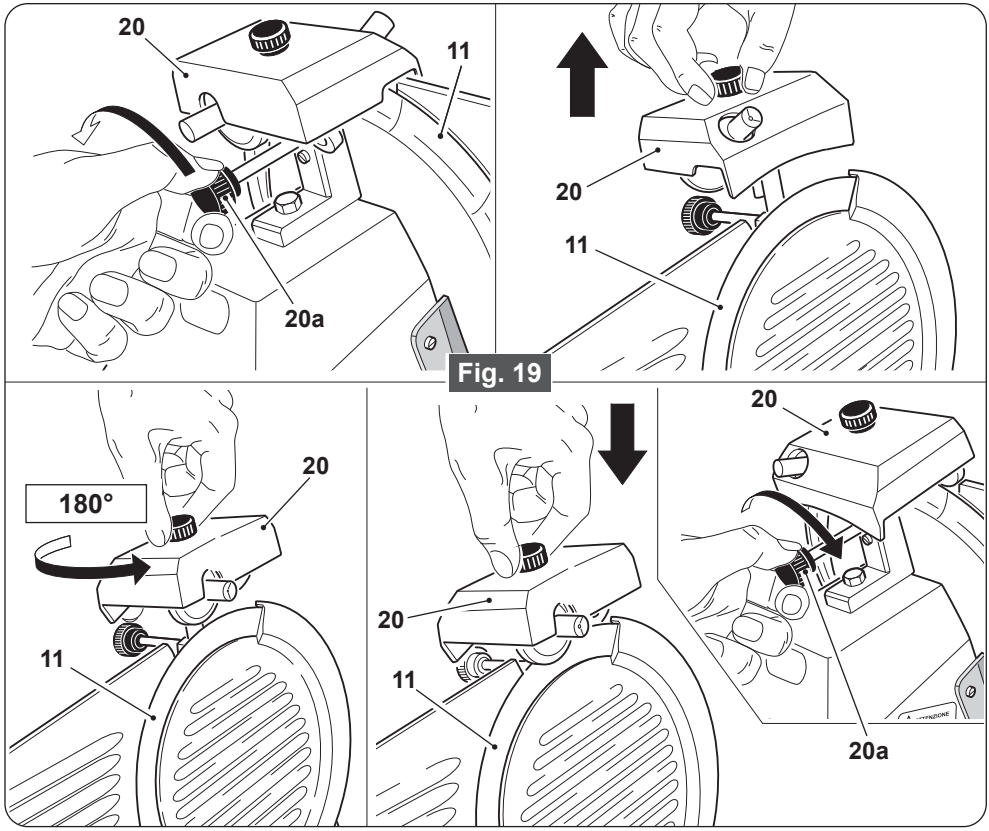

Fig. 19

EXECUTION OF THE SHARPENING

3. Trigger the switch (1) and press the little button (x2);

4. Allow the blade to rotate for about 30 to 40 seconds and then use the switch (1) to stop it checking with a slight shift (using a pencil) to the outside of the blade if the burr is formed.

We reccomend to perform this check very carefully as the blade is very sharp.

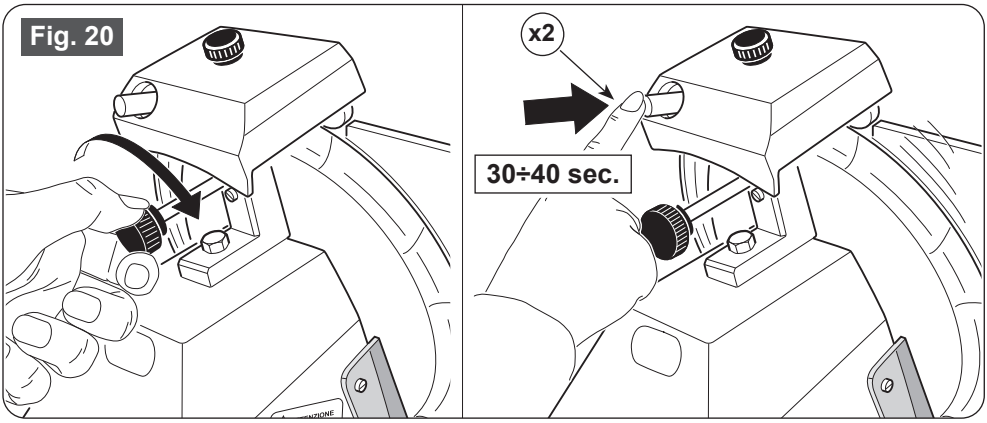

5. Ascertained the formation of the burr, trigger the switch again (1) for 3/4 seconds pressing the little buttons at the same time (x2 and x3);

DO NOT PROLONG THIS OPERATION BEYOND THE FEW ABOVEMENTIONED SECONDS TO PREVENT THAT THE BLADE EDGE WILL TWIST.

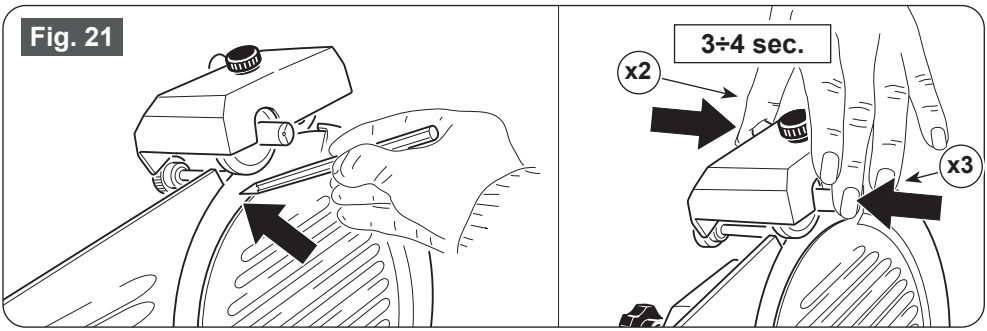

EXECUTION OF THE SHARPENING

6. After completing sharpening, we advise cleaning the wheels using a small brush soaked in alcohol;

7. After the sharpening operation return the sharpener to its original position.

8. Accurately clean the blade and the machine as indicated in the previous paragraphs.

LUBRICATION

10.1 - Food holder sliding bar (weekly)

☞ **Only use the fitted oil; if you don't have one use vaseline white oil. DO NOT USE VEGETABLE OIL.**

- Apply a few drops of lubricant o the guide rails and slide the assemblies back and forth 3/4 times;
- Clean where necessary wiping the excess lubricant.

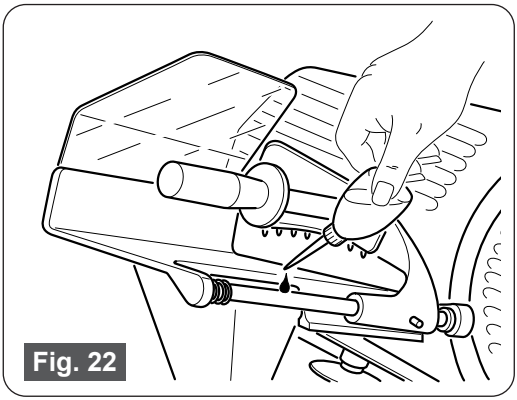

Fig. 22

MOTOR BELT TENSION ADJUSTMENT

If, after a certain period of time, the slicer shows unusual noise due to the belt adjustment, refer to the an authorized centre or to the manufacturer

TAKING THE SLICER OUT OF SERVICE

11.1-Correct procedure

A machine compromises:

- Aluminium-alloy frame.
- Stainless-steel inserts and components.
- Electrical parts and electrical cables.
- Electrical motor
- Plastics, etc.

- When commissioning third parties to perform dismantling and demolition, only businesses authorised to dispose of these materials should be employed.
- When demolishing without outside assistance, sort the various types of material and hand over to authorised businesses for disposal.

ALWAYS comply with the current legislation of the country in which the slicer is utilised.

WARNING: ALWAYS consult the manufacturer or authorised service staff as regards removal and disposal of the blade (11) so that this can take place in complete safety.

DO NOT ABANDON SCRAPS AS THEY ARE A SERIOUS DANGER FOR PEOPLE, ESPECIALLY CHILDREN, AND ANIMALS.

Refer to the "Instructions for treatment at the end of life" on page 12.

TROUBLESHOOTING

- The following information is intended to aid in identifying and correcting defects and faults that may occur during use of the machine.

☞ **Some failures can be resolved by the user; others require precise technical skills or special skills, and must be carried out by qualified personnel with recognized expertise and experience in the specific area of intervention.**

⚠ **Do not disassemble the internal parts of the slicer. The manufacturer declines all responsibility for any damage caused by tampering.**

- The table below shows the most common problems that occur during the use of the slicer and the operations required to eliminate the possible causes.

PROBLEM	CAUSES	SOLUTION
Pressing the green or white button the machine will not start.	No power supply.	Check that the plug is properly inserted.
	Defective electrical control circuit.	Call technical assistance.
The machine will not start, and you hear a continuous noise like a buzz (only machines with three-phase motor).	The motor is functioning single- phase.	Immediately press the stop button (red) and have checked the power supply cable and the circuits upstream by qualified personnel.

> > > >

PROBLEM	CAUSES	SOLUTION
Pressing the green or white button the machine starts, but will not turn the operation light on.	Defective indicator.	Do not use the machine with light indicator off; consult promptly the customer service.
The machine starts but vibrates, the motor is very hot and there is bad smell.	Defective motor or transmission.	Do not use the machine, consult promptly the customer service.
The machine under load slows or stops.	Defective transmission.	Consult the customer service.
Excessive resistance at cutting of the product.	The blade is blunt.	Sharpen the blade.
The slices are ragged and/or irregularly shaped.	The blade is blunt.	Sharpen the blade.
	Blade excessively worn.	Consult the customer service.
The blade sharpening is unsatisfactory.	Worn wheels.	Replace the wheels; Call the customer service.
The product tray does not slide.	Insufficient guides lubrication.	Lubricate.
Pressing the black or red button the machine does not stop.	Defective electrical control circuit.	Stop the machine pulling the plug from the network and call customer service.

USER NOTE

This pubblication shall consist of n°42 pages as specified below:

- Title page with Notes for the User (no print back);
- Index of contents, pag. 3;
- From pag. 3 to pag. 42: progressive numeration.

The maufacturer reserves its right to bring changes to the information indicated in the manual without the obligation to communicate it in advance, as long as they don't alter safety.

ELECTRICAL SCHEME TG 00MINI

for versions

F 300I - F 330I

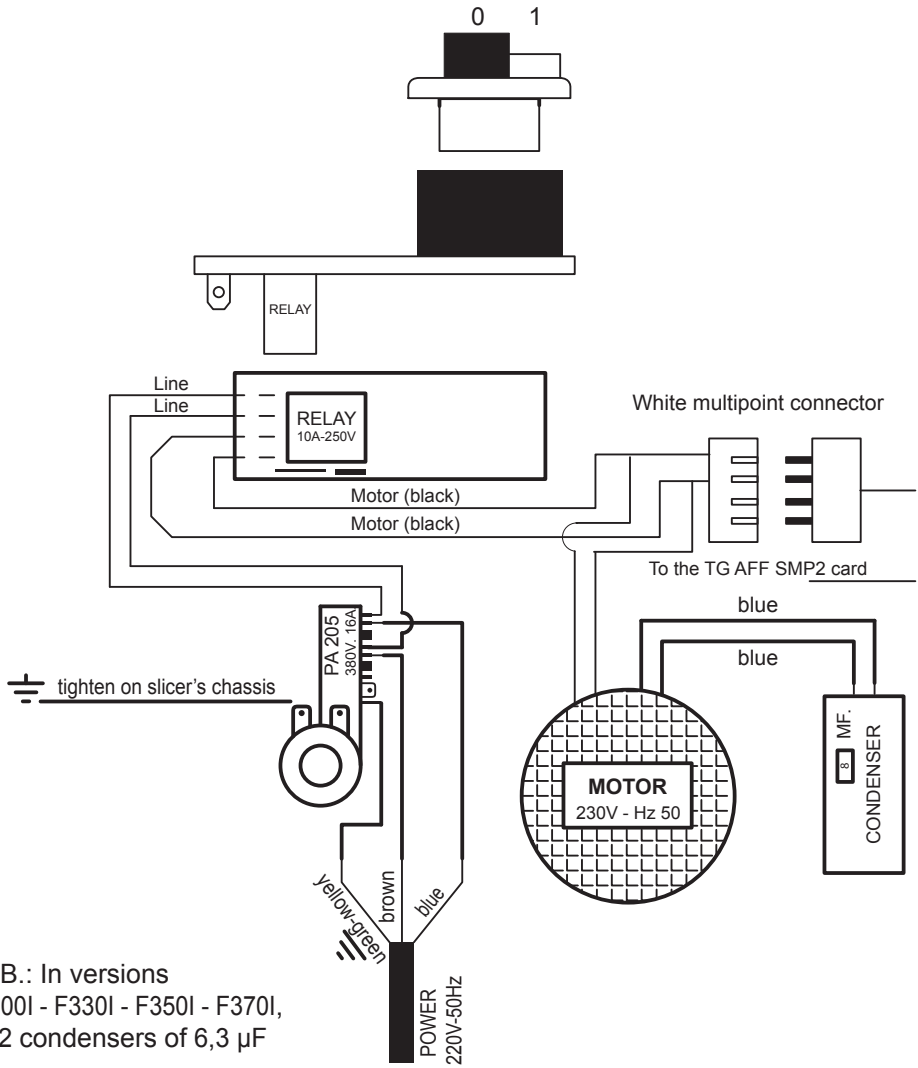

N.B.: In versions
F300I - F330I - F350I - F370I,
n°2 condensers of 6,3 µF

Only for personnel authorized by the manufacturer

BOARD mod. TG AFF SMP2

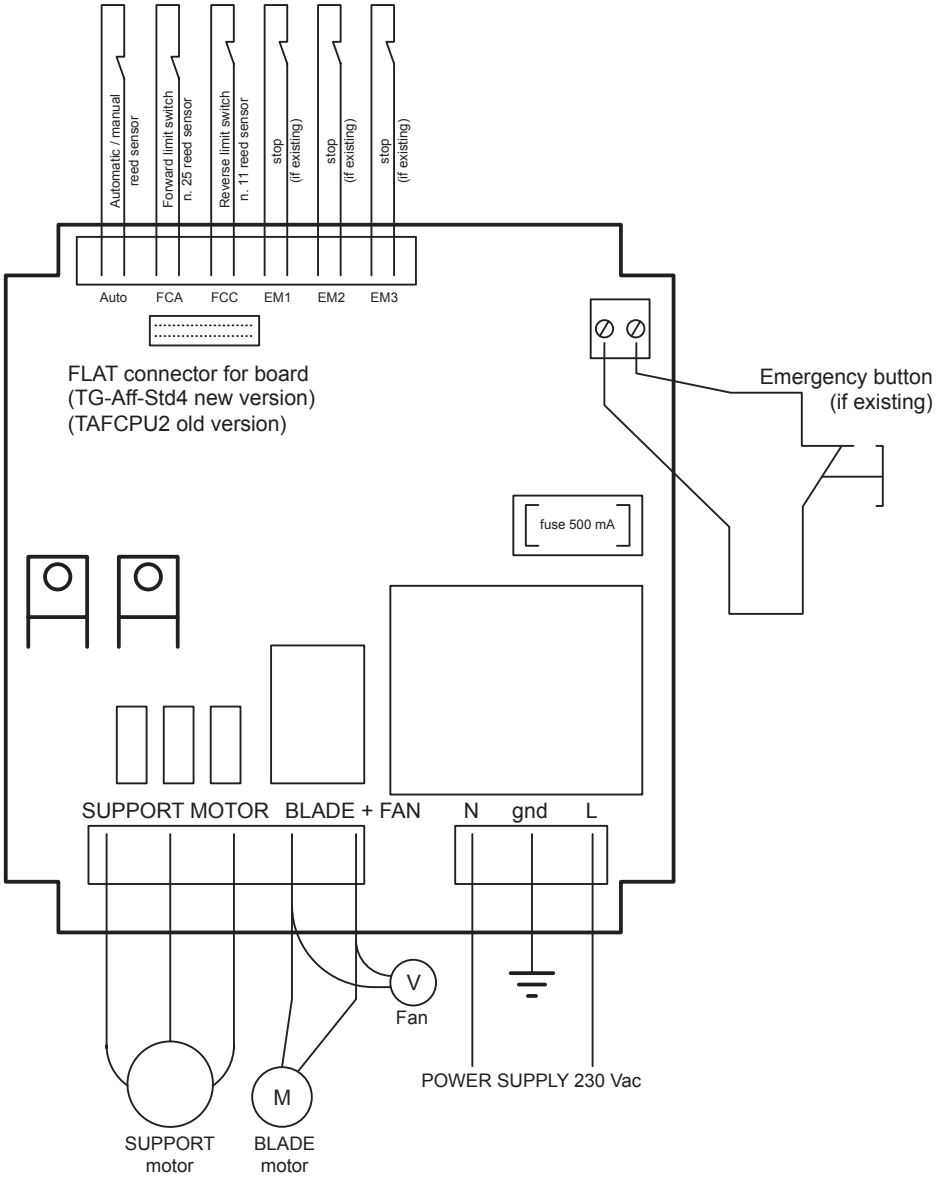

Only for personnel authorized by the manufacturer

MOCA DECLARATION

DECLARATION OF CONFORMITY OF THE MATERIALS AND OBJECTS DESTINED TO COME INTO CONTACT WITH FOOD PRODUCTS

1.With this document, it is declared that the product/article/machinery:
VERTICAL GRAVITY SLICER WITH ANODISED ALUMINIUM STRUCTURE
supplied for prolonged contact with foodstuffs;

IS COMPLIANT

WITH THE FOLLOWING EUROPEAN COMMUNITY LEGISLATION:

- Regulation 1935/2004 CE
- Regulation 1895/2005 CE
- Regulation 10/2011 CE

AND THE FOLLOWING ITALIAN LEGISLATION:

- Ministerial Decree 21/03/1973 and as amended, including MD 140/2013
- Italian Presidential Decree 777/82 and as amended

2.The blade of the afore-mentioned slicer is manufactured with the following alloy:
- AISI 420, C45 _ All domestic CE models and models with blade diameter from 195 to 250 mm CE professional
- AISI 420, 100Cr6 models with blade diameter from 300 to 370 mm CE professional

FOODSTUFF SUITABILITY TEST

☒ The material respects the overall migration and specific migration limits of nickel, chrome and manganese in the test condition given by the producer supplier of the CHIARAVALLI GROUP SPA AND SLAYER BLADE SRL blade;

☒ The material used to manufacture the slicer and its surface treatment are subjected to restrictions in the legislation stated:

- **Regolamento (CE) n. 1935/2004** of the European Parliament and of the Council of 27 October 2004 on materials and articles intended to come into contact with food and repealing Directives 80/590/EEC and 89/109/EEC
- Technical Document "**Metals and alloys used in food contact materials and articles**" (Council of Europe, 2013)
- **DIN 10531:2011** Food hygiene - Production and dispense of hot beverages from hot beverage appliances - Hygiene requirements, migration test

To perform the analysis, a specimen was put into contact with 5000 ml of water simulant for 2 hours at 40°C at third contact.
Aluminium was searched for on the simulant coming from the contact using the ICP-MS technique.

Component	Result	Unit of measurement	Method	Limit of release (mg/kg)
Aluminium	< 0,10	mg/kg	ref. EPA 6010D 2018	5

The simulants and test conditions are selected on the basis of the Directives 82/711/EEC and 85/572/EEC and as amended and Decree n.338 dated 22/07/1998. (See note at the end of the document regarding art. 22 of Reg. (EU) n.10/2011 on Transitional Provisions).

The overall migration limit, along with the other restrictions/specific migrations to which the monomers and/or additives present in the material are subjected, are respected in the conditions of use mentioned above. The affirmation is supported by analytical tests performed in compliance with the Directives 82/711/EEC, 85/572/EEC and 97/48/EC and with Italian Ministerial Decree 21/03/1973 or on the basis of the calculations carried out considering the content of the substances subjected to migration limits. The calculations were made assuming that 1 kg foodstuff comes into contact with 1 product.

The material contains substances governed by Regulations (EC) n. 1333/2008 and 1334/2008 and as amended (substances called “dual use”).
According to experimental data and/or theoretical calculations, these substances are compliant pursuant to art. 11 of Regulation (EU) n.10/2011 paragraph 3, letters a and b and of Italian Ministerial Decree 21/03/73.

This declaration is valid from the date shown below and will be previously replaced if changes are made to production/formulation of the material or if the references to legislation in point 1 are modified and updated in a way to require a new verification to confirm conformity.

NOTE: this declaration is drawn-up pursuant to art. 22, paragraph 1: “Transitional Provisions” and art. 23 “Coming into force and application” of the Regulation (EU) n.10/2011.

The following Test Reports relative to the migration tests performed are available on the website.

Rdp n°13508-01 Bpsec S.r.l.
REPORT n°13508-01 Bpsec S.r.l.

☒For slicer models with details in olive wood, the following tests were performed:

Screening of inorganic compounds in materials in contact with the foodstuffs

with the purpose of detecting and quantifying the molecules extractable from the sample by contact with 65% nitric acid at 120°C for 2 hours and detectable by plasma emission spectrometry (ICP/OES).

Screening of volatile organic compounds in materials in contact with the foodstuffs

with the purpose of evaluating the transfer of volatile substances making up the material that can migrate into the foodstuff by conditioning at a suitable temperature, extraction of the head space (via 30 minute contact at 125°C) and gas chromatographic analysis with mass detector.

Screening of semi-volatile organic and non-volatile compounds in materials in contact with the foodstuffs

with the purpose of detecting and quantifying, conventionally in benzyl butyl phthalate (BBPd4), the molecules extractable from the sample by contact with 95% ethanol at 60°C for 10 days and detectable by gas chromatography equipped with mass detector (GC EI/MS).

Conclusions
No hazardous substances have been detected.

The following Test Reports relative to the migration tests performed are available on the website.

Rdp n°13509-01 Bpsec S.r.l.
Report - 13509-01 Bpsec S.r.l. Elements
Report - 13509-01 SVOC Bpsec S.r.l.
Report - 13509-01 VOC Bpsec S.r.l.

FAC SRL
macchine affettatrici industriali e familiari
Via Morazzone, 137 - 21044 CAVARIA (VA)
Tel. +39 0331 212252 - Fax. +39 0331 216443
www.slicers.it
info@slicers.it

10/2024